Automatic Door Systems

H-5

Single-winged / Bi-parting

使用說明

OPERATION INSTRUCTION

http://www.kth-automaticdoor.com/
e-mail : kth@kthtw.com

狀況三 門扇運行有雜音 The Door-Leaf sends out abnormal noise in operating.

原因一
吊輪螺絲鬆動
Cause 1
The SCREW of the HANGING TWIN-WHEEL is loose.

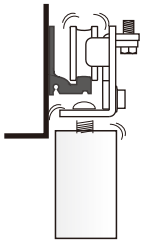

處理：
重新將吊輪螺絲旋緊
How to solve:
Refasten the SCREW of HANGING TWIN-WHEEL.

原因二
吊輪損壞
Cause 2
HANGING TWIN-WHEEL is broken.

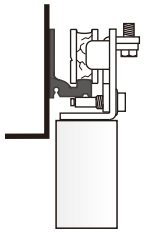

處理：
更換吊輪
How to solve:
Replace a new one HANGING TWIN-WHEEL.

原因三
吊輪髒污
Cause 3
HANGING TWIN-WHEEL is dirty.

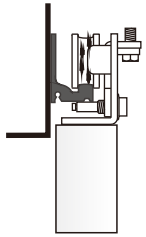

處理：
清潔吊輪
How to solve:
Clean the HANGING TWIN-WHEEL.

原因四
軌道髒污
Cause 4
ALUMINUM PROFILE is dirty.

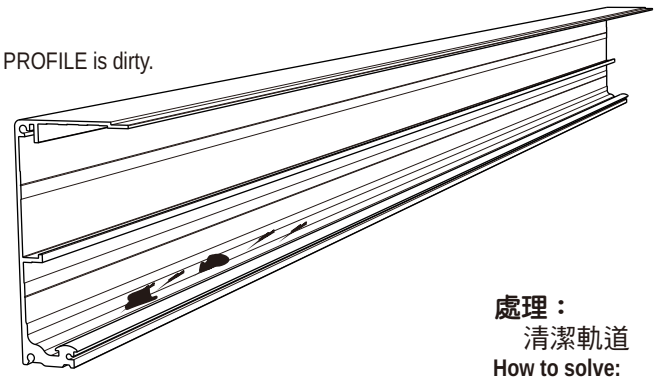

處理：
清潔軌道
How to solve:
Clean the ALUMINUM PROFILE.

本公司另有以下各類自動門配備，請洽本公司各經銷商
Our company has the following series of automatic door, please contact with our distributors/representations.

圓型門 Round type door

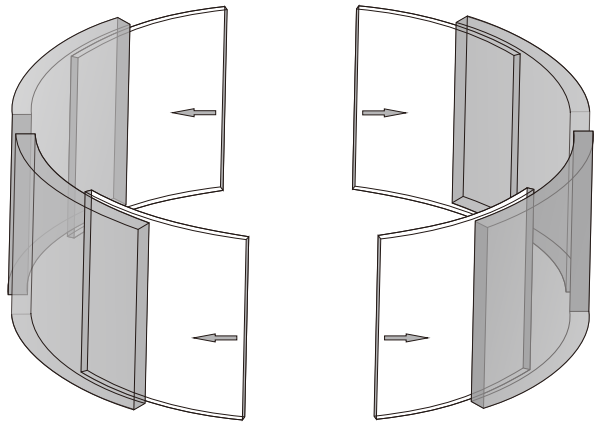

按裝方式請參考圓型門按裝說明
Installation: Please in accordance with the instruction of Round Type Door.

弧型門 Curved Type Door

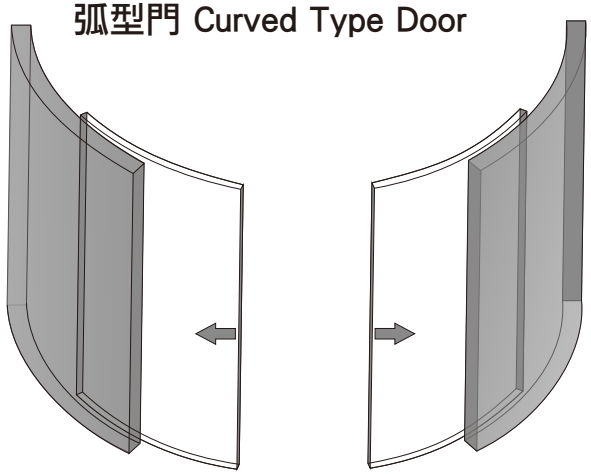

按裝方式請參考弧型門按裝說明
Installation: Please in accordance with the instruction of Curved Type Door.

四扇走雙向門
Telescopic 4-winged Sliding Doors.

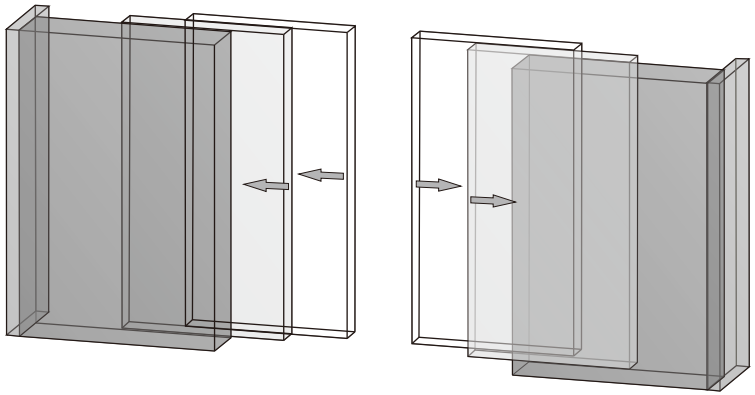

按裝方式請參考四扇走雙向門按裝說明

Installation: Please in accordance with the instruction of Telescopic 4-winged Sliding Doors.

雙扇走單向門
Telescopic 2-winged Sliding Doors.

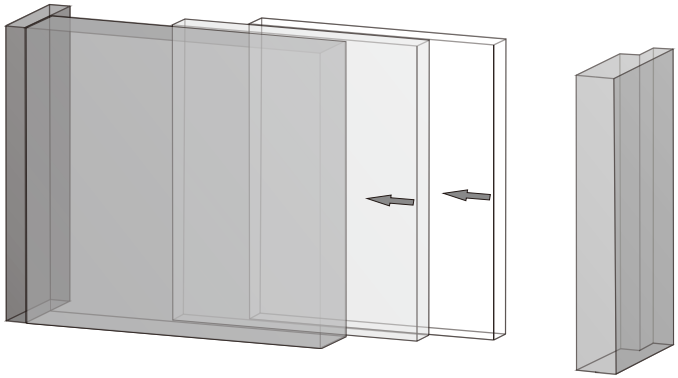

按裝方式請參考雙扇走單向門按裝說明

Installation: Please in accordance with the instruction of Telescopic 2-winged Sliding Doors.

狀況二 門扇運行不順暢 Door-Leaf isn’t smooth in operating.

原因一
吊輪按裝未垂直
Cause 1
HANGING TWIN-WHEEL is not at vertical position.

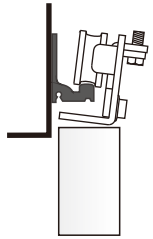

處理：
重新調整吊輪
How to solve:
Readjust the HANGING TWIN-WHEEL.

原因二
門扇與地軌有磨擦或地軌髒污
Cause 2
1.Door touches Ground Rail.
2.Ground Rail is dirty.

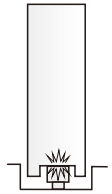

處理：
1.調整門扇高度
2.清理地軌髒汙
How to solve:
1.Readjust the distance between Door and Ground Rail.
2.Clean up the Ground Rail.

原因三
軌道未垂直
Cause 3
ALUMINUM PROFILE is not vertical.

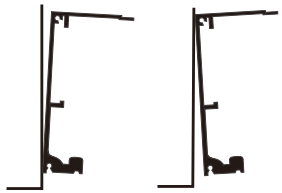

處理：
重新調整軌道的垂直位置
How to solve:
Readjust the vertical position of the ALUMINUM PROFILE.

原因四
軌道未水平
Cause 4
ALUMINUM PROFILE is not at vertical position.

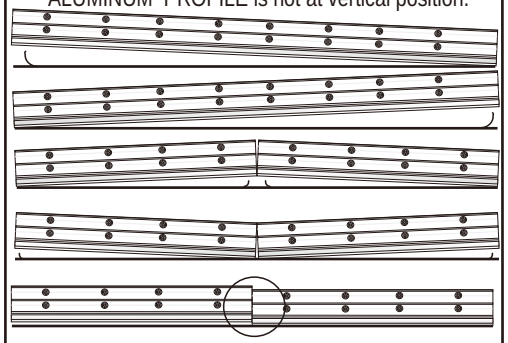

處理：
重新調整軌道的水平位置
How to solve:
Readjust the level position of the ALUMINUM PROFILE.

原因五
軌道固定螺絲與馬達轉輪或皮帶磨擦
Cause 5
SCREW of ALUMINUM PROFILE.

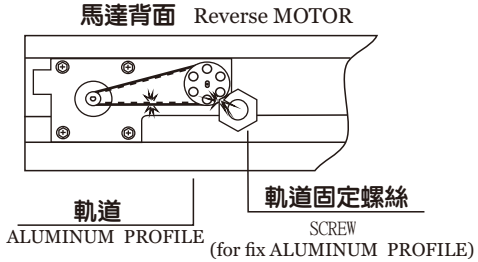

處理：
卸下馬達,並重新調整該軌道固定螺絲的位置
How to solve:
Unload the MOTOR, readjust the POSITION of SCREW.

狀況一 門扇無法開啟或關閉 Door can’t be opened or closed.

原因一
門扇上方與橫樑接觸
Cause 1
Above the Door-Leaf touched with the crossbeam.

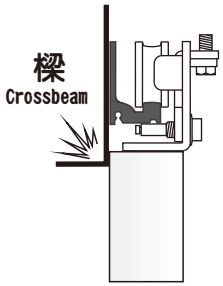

處理：
調整門扇與橫梁間隙
How to solve:
Adjustment the interval between the Door-Leaf height and Crossbeam.

原因二
門扇與地軌接觸
Cause 2
The Door-Leaf touched with the Ground Guide Rail.

處理：
調整門扇高度
How to solve:
Adjus the Door-Leaf height.

原因三
門扇脫軌
Cause 3
Door-Leaf derails the ALUMINUM PROFILE.

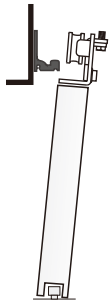

處理：
重新將門扇置入軌道
How to solve:
Put the Door-Leaf into the ALUMINUM PROFILE again.

原因四
門扇未垂直
Cause 4
Door-leaf is not vertical.

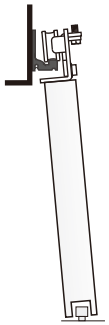

處理：
調整地軌位置
How to solve:
Adjust the Ground Guide Rail/Wheel position.

原因五
感應器故障或未接線至集線器
Cause 5
SENSOR is broken or disconnects to the COMBINED TERMINAL BLOCK.

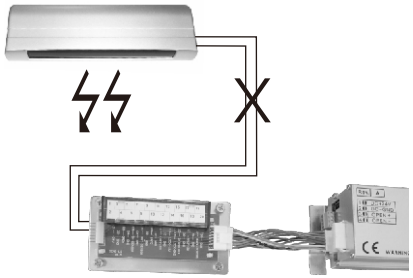

處理：
1.若感應器故障則更換新的感應器
2.檢查感應器是否連接至集線器
How to solve:
1.If SENSOR is broken please change a new one.
2.Check SENSOR whether it connects to the COMBINED TERMINAL BLOCK.

1. 套件規格 COMPONENTS SPECIFICATION.....P1
2. 產品規格 TECHNICAL SPECIFICATION.....P2
3. 機械箱剖面圖 SECTIONAL DRAWING.....P3
4. 機械箱高度圖 INSTALLATION DRAWING.....P4
5. 按裝流程圖 INSTALL PROCEDURE.....P5
6. 尾輪座按裝 INSTALL THE BELT ROLLER.....P6
7. 吊滑輪位置圖 THE POSITION OF THE HANGING TWIN-WHEEL.P7
8. 皮帶按裝 INSTALL THE RACK BELT.....P8
9. 門扇調整 ADJUST THE DOOR-LEAF.....P9
10. 電氣連接 CONNECTION.....P10
11. 信號連接 OUTPUT CONNECT.....P11
12. 測試及調整 TEST AND ADJUST.....P13
13. 各調節旋鈕功能說明 ADJUSTMENT.....P14
14. 故障檢查流程 BROKEN CHECKING.....P16
15. 故障排除(繁體) P17
16. TROUBLESHOOTING P18
17. 故障排除(圖示) P19

微電腦控制器
MICRO-CONTROLLER

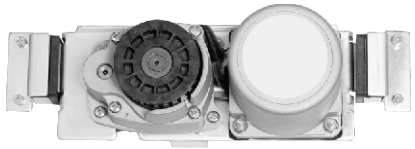

直流無刷馬達及減速齒輪組
BRUSHLESS DC MOTOR

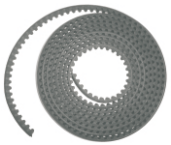

齒型皮帶
RACK BELT

紅外線感應器(選配)
SENSORS
(OPTIONAL DEVICE)

集線器
COMBINED
TERMINAL BLOCK

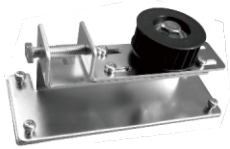

尾輪座一組
BELT ROLLER

雙開五金配件

(BI-PARTING)HANGERS & IRON PARTS

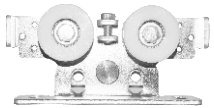

吊輪組四組
HANGING
TWIN-WHEEL4 PCS

皮帶中央支撐板
BELT BRACE

被動板
PASSIVE BRACE

主動板
ACTIVE BRACE

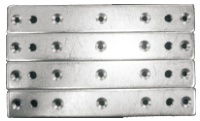

門扇吊板 4 個
HANGING
BRACE-4 PCS

五金包
IRON PARTS SACK

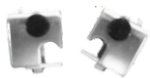

吊滑輪固定擋片 2 個
STOPER-2 PCS

束帶 5 個
CABLE TIE-5 PCS

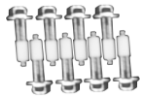

小阻輪 8 個
BLOCK SCREW-8 PCS

地輪
GROUND WHEEL-2PCS

螺絲 8 個
SCREW-8 PCS

門扇固定螺絲 8 個
DOOR SCREW-8 PCS

PROBLEMS	REASONABLE	CHECK	HOW TO SOLVE
DOOR CAN'T BE MOVED.	1.No power.	Broken circuit.	Check the broken circuit position.
		The Power Switch is not opened.	Open the POWER SWITCH.
	2.The door is locked.	Door is locked and no movement action.	Open the DOOR LOCK.
	3.The sensor is broken.	Signal light is WORKING.	Check the MICRO-CONTROLLER
		Signal light is OUT OF WORKING.	Check the CIRCUIT OF SENSOR or change a new one SENSOR.
SPEED	1.Speed is too slow.	Check the Speed at KNOB of MICRO-CONTROLLER.	Adjust the Speed of Open/Closed Door.
	2.Door runs into the obstructor, then cause the Door moving slow.	Installation problem or dirty.	Reinstall or clean the ALUMINUM PROFILE.
	3.Door is difficult to move.	Turn off the power.Use hand to move the Door, besides,check the Ground Guide Rail whether it is dirty.	Clean the Ground Guide Rail.
		Check the HANGING TWIN-WHEEL whether it is broken.	Change a new one.
		Check the Door Bolt in the door bottom whether it is loosen.	Fix the Door Bolt.
		Check whether the Ground Wheel is broken.	Change a new Ground wheel.
DOOR CAN'T FULL OPEN.	In the Half-Open way.	Check the Knob/Switch.	Turn on to Full Open.
DOOR CAN'T CLOSE.	1.In the Full-Open way.	The SENSOR keeps working.	Check wiring or change a new SENSOR.
	2.The Door opens suddenly while it is moving to close .	The SENSOR probably is installed with something wrong.	Adjust the SENSOR or change a new one.

問題	可能原因	檢查方向	排除操作
無開門動作	1. 無電源	電路斷路	檢查電路斷點
		電源開關未開	開啟電源開關
	2. 門被鎖住	門鎖鎖住，控制器無動作	開啟門鎖
	3. 感應器故障	感應信號燈有動作	檢查控制器
		感應信號燈無動作	檢查感應器線路或更換感應器
速度太慢	1. 速度設置太慢	控制器速度調整	調整開門或關門速度
	2. 門扇遇到阻礙物，變成慢速	軌道施工不良或髒污	重新施工或清理軌道
	3. 門扇滑動阻力過大	關閉電源，用手使門滑動並檢查地面導軌是否有髒污	清理地面導軌
		吊滑輪磨損	更換吊滑輪
		檢查門扇底部的鎖閂是否鬆動	固定好鎖閂
		檢查地面導輪是否已損壞或鬆動	更換或重新固定地面導輪
門扇開不到底	處於半開模式	檢查全開/半開開關	切換至全開
門扇不能關閉	1. 門扇處於全開狀況無法關閉	感應器信號燈持續亮著	感應器線路檢查或更換感應器
	2. 門扇關到一半隨即開啟	感應器誤動作	調整或更換感應器

型號 TYPE	H-5	
種類 MODEL	單向橫開式 SINGLE-WINGED	雙向橫開式 BI-PARTING
門扇重量 DOOR WEIGHT	250kg X1扇(door)	200kg X2扇(door)
門扇寬度 DOOR WIDTH	DW=500mm~1200mm	DW=500mm~2400mm
按裝方式 INSTALL WAY	表面按裝 Surface install	表面按裝 Surface install
馬達 MOTOR	DC24V 100W BRUSHLESS DC MOTOR 直流無刷馬達	
控制器 CONTROL	微電腦化處理機控制器 USER-FRINEDLY MICRO-CONTROLLER	
消耗電量 POWER CONSUMPTION	100W	
電源電壓 VOLTAGE	AC100V~240V皆可(either AC100V~240V)	
環境溫度 ENVIRONMENTAL TEMPERATURE	-20℃~+50℃	
噪音量 VOLUME	最大 60 分貝 60decibel(max.)	
開啟速度 STARTING SPEED	450mm/秒(second)	400mm X 2 /秒(second)
開啟時間 STARTING TIMES	可調 0 秒至 64 秒 0~64 sec. (regulable)	
傳動要件 TRANSMISSION IMPORTANT CONDITION	齒形皮帶 RACK BELT S8M	
開門幅度 OPENING DOOR RANGE	全開/半開 可調整距離 FULL/HALF-OPEN (regulable)	
PFC 功率因素 POWER EFFICIENCY	0.95(AC100V全載時/in AC100V Full load)	
手推開啟力量 TRACTION FORCE	3 kg	

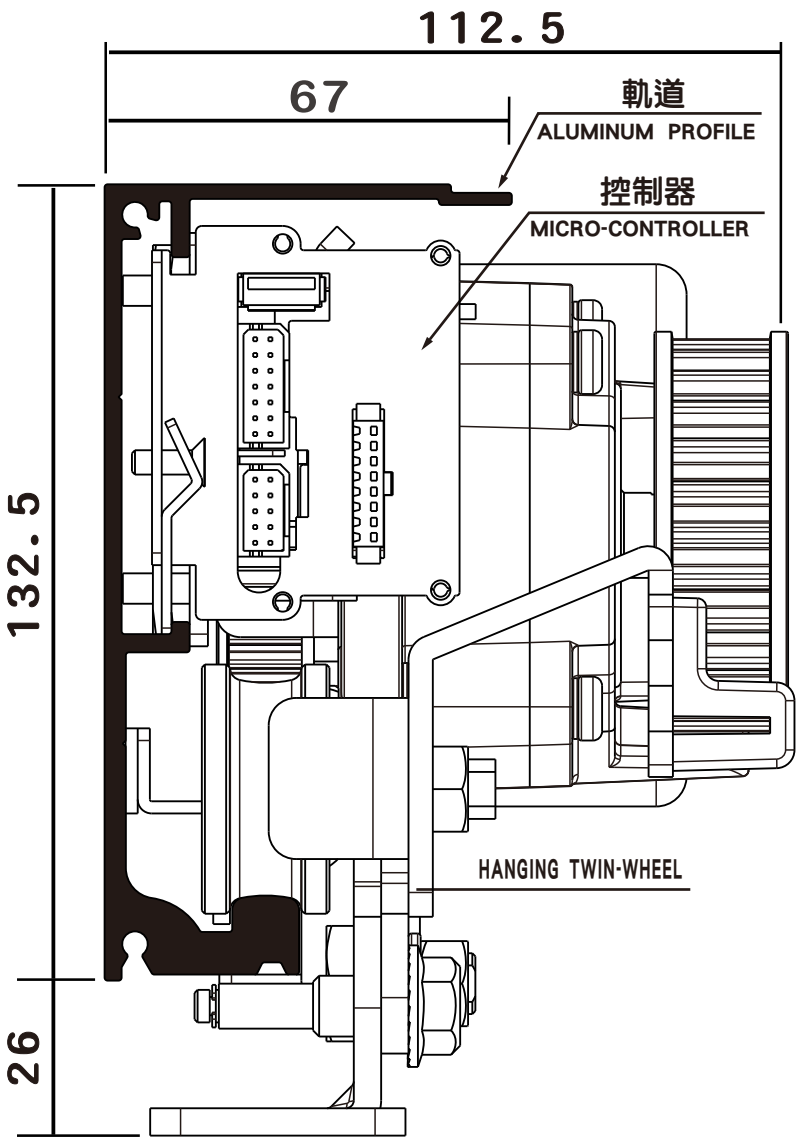

單位：公釐
MEASURE : mm

1. 關閉電源
Turn off power.
2. 用手滑動門
Use your hand to move the Door-Leaf.

人工初步檢判
Preliminary analysis

運轉不平穩
Running isn't Smooth

1. **門和門側壁或橫樑間未校準**
   Check the distance between Door and Wall / Crossbeam.
2. **吊輪磨損**
   HANGING TWIN-WHEEL is broken.
3. **地面導軌髒污**
   The GROUND RAIL is dirty.
4. **門扇扭曲變形**
   The Door-Leaf becomes deformed.
5. **小阻輪間隙未校準**
   Check BLOCK SCREW whether need to adjust.
6. **地面導輪損壞**
   The GROUND GUIDE WHEEL is damaged.
7. **門鎖或門閂故障**
   Check the LOCK whether it is broken.
8. **機箱蓋未校準**
   Check the ALUMINUM COVER whether it isn't fixed.
9. **機箱內有污垢**
   There is dirt inside the ALUMINUM PROFILE.

運轉平穩
Running smooth

檢查線路
Check the circuit

1. 開啟電源
Turn on power.
2. 取下感應器信號線
Take out the sensor signal line.
3. 短路感應器信號線接點
Test the circuit of SENSOR.

運行檢視
Running check

運轉平穩
Running smooth

感應器問題
The PROBLEM of the SENSOR

1. **感應器故障或工作不正常**
   Check the SENSOR whether it is broken.
2. **感應器電線斷路或短路**
   Check the SENSOR whether the wire is broken or short circuit.

運轉不平穩
Running isn't Smooth

馬達裝置問題
The PROBLEM of the MOTOR

1. **接線器接觸不良**
   Wiring connects fault.
2. **控制器部件故障**
   Spare parts of the MICRO-CONTROLLER broken.

E 關門速度調節旋鈕 The closing speed of the door

當門扇慢速行進時，可調整慢速速度，數字越大，速度越快。
初始調整時，請將數字由小而大，逐次調整。

Adjust the CLOSED SPEED :Higher number, faster speed.
CAUTION: please adjust the number one by one from low to high.

F 關門慢速距離調節旋鈕 The slowing range of closing door

可調整門扇關閉時慢速距離，數字越大，距離越長。
初始調整時，請將數字由大而小，逐次調整。

Adjust the SLOW RANGE of CLOSED DOOR
Higher number, more range about the slow range at open door position.
CAUTION: please adjust the number one by one from high to low.

G 慢速速度調節旋鈕 The slowing speed of the door

當門扇慢速行進時，可調整慢速速度，數字越大，速度越快。
初始調整時，請將數字由小而大，逐次調整。

Adjust the SLOW SPEED
Higher number, faster speed.
CAUTION: please adjust the number one by one from low to high.

H 開放時間調節旋鈕 Opening hold time

調整門扇開放時間，數字越大，門扇停留時間越長，
在最小(0)秒和最大(20)秒之間調整。

Adjust the HOLD OPEN TIME
Higher number, the hold time is longer.

NUMBER	0	1	2	3	4	5	6	7	8	9
SECOND	0	1	2	3	4	5	6	10	32	64

單位：公釐
MEASURE : mm

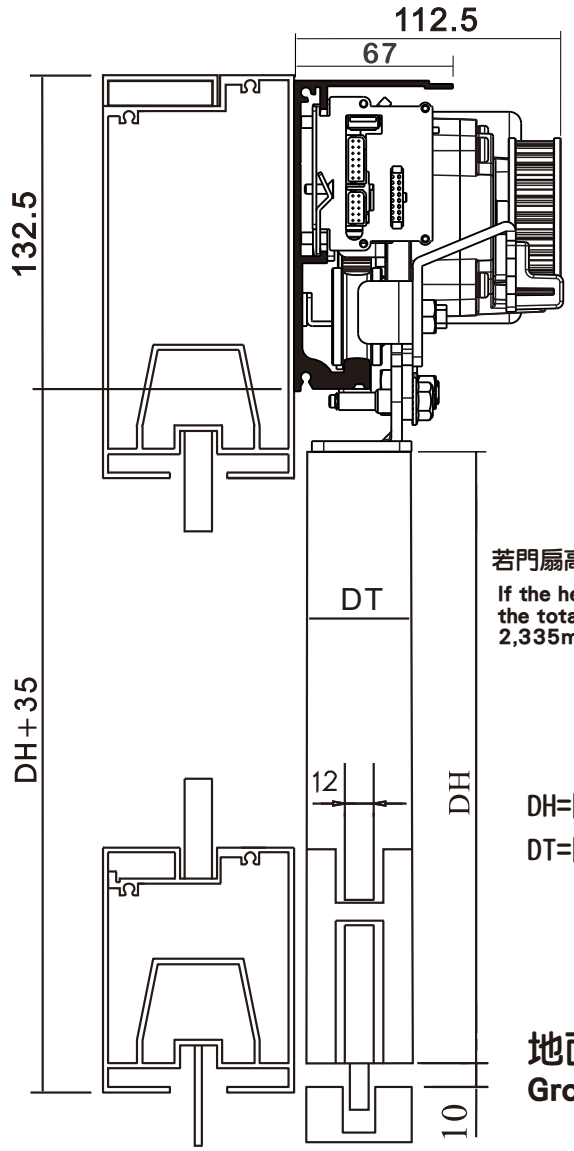

若門扇高度爲2300mm, 則立機箱高度爲2335mm
If the height of the Door-Leaf is 2,300mm, then the total height of the ALUMINUM PROFILE is 2,335mm.

DH=門扇高度Door height
DT=門扇厚度Door thickness

地面導槽
Ground Guide Rail(ditch)

1 準備 Prepare
機箱高度/水平確認
Should correct the height and the leveling of the ALUMINUM PROFILE

2 切割/按裝機械箱
Cut and install the ALUMINUM PROFILE

3 各感應器按裝
Install the SENSORS

4 馬達部件
MOTOR

5 控制器部件
MICRO-CONTROLLER

6 尾輪座部件
Install the BELT ROLLER

7 懸掛/調整門扇
Hang and adjust the Door-Leaf

8 皮帶按裝調整
Install and adjust the BELT

9 電氣連接
Power connect

10 測試及調整
Test and adjust

A 半開位置調節旋鈕 Full/Half opening

全開/半開接點ON時，半開功能隨即動作，此時可藉由調節旋鈕設定門扇開啟位置，數字越大，開啟幅度越寬。

Adjust the RANGE of the HALF OPEN DISTANCE.
Higher number, wider range.

B 煞車力調節旋鈕 Brake power

門扇開啟時，其煞車力量可自由調整，門扇較輕時，所需煞車力較小；門扇較重時，所需之煞車力相對較大。可由調節旋鈕調整煞車力至適當大小。
當門扇重量小於50kg時，請調於0~2。
當門扇重量大於80kg時，請調於5以上

The Door-Leaf is slight, the BRAKE POWER is less.
Please choose 0~2 if the Door-Leaf is under 50kg.
Please adjust number from number 5 if the Door-Leaf is over 80kg.

C 開門速度調節旋鈕 The opening speed of the door

可調整門扇開啟時行進速度，數字越大，速度越快。
初始調整時，請將數字由小而大，逐次調整。

Adjust the OPEN SPEED
Higher number, faster speed.
CAUTION: please adjust the number one by one from low to high.

D 開門慢速距離調節旋鈕 The slowing range of opening door

可調整門扇開啟時慢速距離，數字越大，距離越長。
初始調整時，請將數字由大而小，逐次調整。

Adjust the SLOW RANGE of OPENING DOOR
Higher number, more range about the slow range at open door position.
CAUTION: please adjust the number one by one from high to low.

電源開關開啟前，先手動開門和關門，確認門扇能夠平滑移動，並確認電氣連接無誤後，方可供電。
Before turn on the power, make sure the Door-Leaf can be smoothly moved, and the electric link is correct at first.

1.系統行程記憶 SYSTEM PROGRAM REMEMBER

當電源開啟後，控制系統從門的關閉位置至開啟位置低速行進，確認並記憶行程距離，經由內部微電腦處理器自動設定後，門扇開閉位置即予以固定。

After turn on the power, the MICRO-CONTROLLER will remember the distance and the range.

2.調整 ADJUST

控制器面板圖
The FACEPLATE of MICRO-CONTROLLER

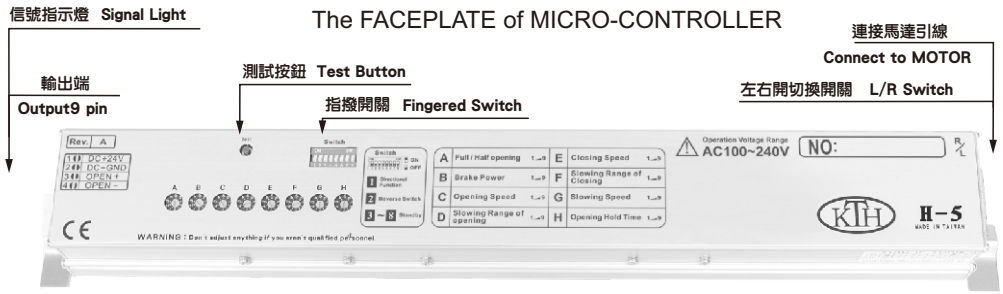

紅色LED-電源指示燈，電源開啟後，LED燈亮，指示電源已接通。
Red LED-Power is connected.

綠色LED-信號指示燈，當開門信號輸入時，LED燈亮，表示信號輸入。
Green LED-Input the open door signal.

L/R-左右開切換開關。
L/R switch-The direction of the door opening: right/left(R/L).

指撥開關-Pin 1-定向開關 操作方式
- OFF：正常模式
- ON：系統模式為按一下開門，再按一下關門。

指撥開關-Pin 2-反向開關 操作方式
- OFF(正常模式)：停電再復電後，門扇先執行開門動作。
- ON(適合保全系統)：停電再復電後，門扇先執行關門動作。

(爲了控制停電再復電後的門扇開關方向)

Fingered Switch- Pin 1- Directional Function

Operation
- OFF: Normal mode.
- ON: push once , open the door. Push again, close the door.

Fingered Switch- Pin 2- Reverse Switch

(in order to control opening and closing direction of the Door-Leaf after power resumes.)

Operation
- OFF: Normal mode, after power resumes, the Door-Leaf opens the door first.
- ON: suitable for Security System, after power resumes,the Door-Leaf closes the door first.

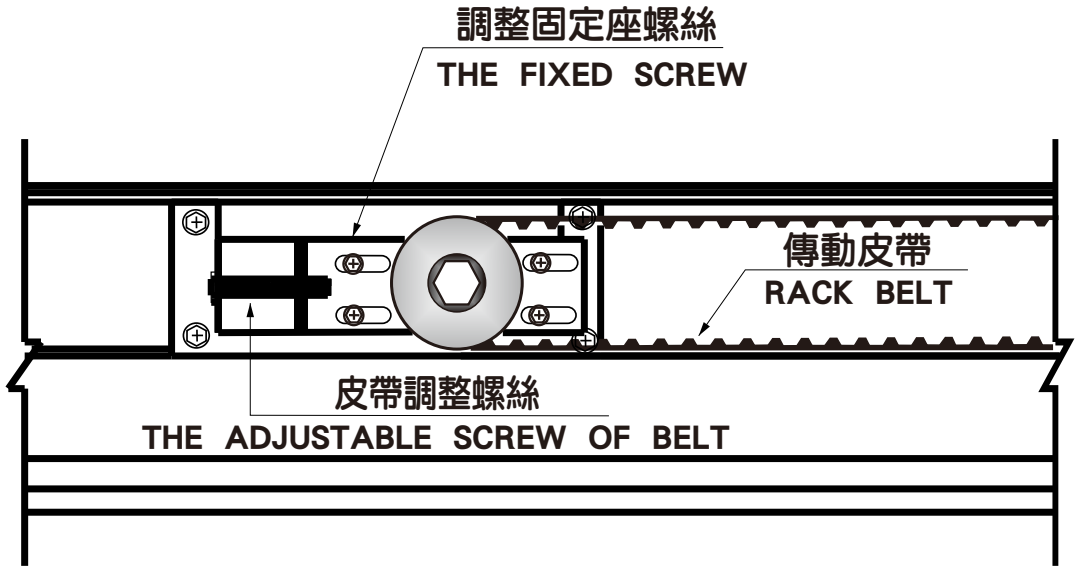

皮帶張力可由皮帶調整螺絲做調整，調整完畢後，須擰緊調整固定座螺絲。

TENSION of BELT can be adjusted by the ADJUSTABLE SCREW of BELT, after that, must tighten the FIXED SCREW of BELT.

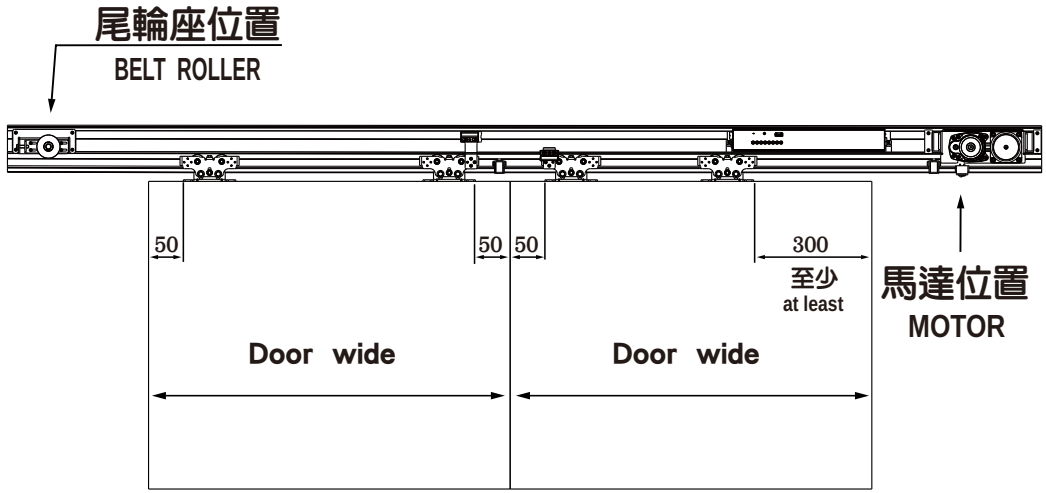

單位：公釐
MEASURE : mm

從室內看，最右側吊滑輪座按裝時須與門扇邊緣距離300㎜以上，以確保門扇可開至最大位置。

Inside the room, the distance between the right side HANGING TWIN-WHEEL and the Door-Leaf must be more than 300mm.

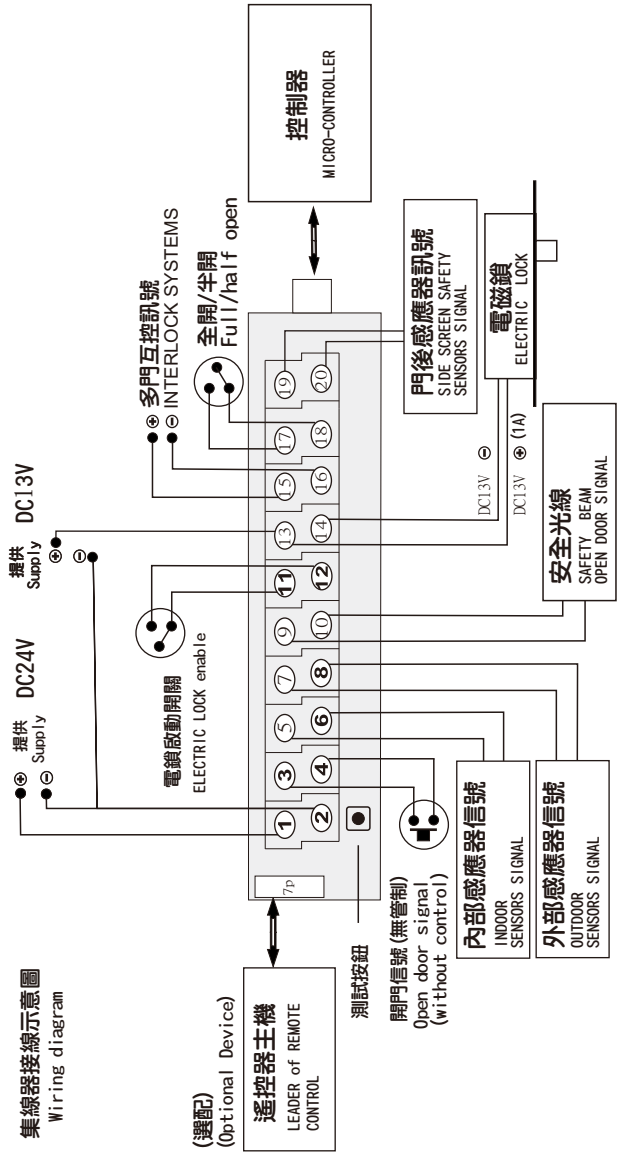

(A) ⑪號與⑫號端子短路時，電鎖功能隨之啟動且當門扇關閉後，⑬號與⑭號端子輸出DC13V供電磁鎖使用。若是⑪號與⑫號端子沒有短路，則⑬號與⑭號端子不會輸出DC13V

The FUNCTION of the ELECTRIC LOCK will work ⑪ and ⑫ are short circuit, then ⑬ and ⑭ will output DC13V for ELECTRIC LOCK after the door closes. ⑬and ⑭ will not output DC13V if ⑪ and ⑫are not short circuit

(B) ⑨號與⑩號端子做爲安全光纖信號控制；當門扇開啟運行當中，⑨號與⑩號端子保持在接受信號狀態中，當門扇關閉後則⑨號與⑩號端子變成不接受信號，安全光線隨即關閉

The SICNAL of the SAFETY BEAM is controlled by ⑨ and ⑩. When door is opening and running , ⑨ and ⑩ keep to accept the signal , then the SAFETY BEAM will be working. ⑨ and ⑩ will not work whin the door is closed , the SAFETY BEAM will lose efficacy when the dooe is closed.

(C) 門後感應器是爲避免們在開啟時後方有物體或是行人進行而發生碰撞其接點訊號於，⑲ ㉑ 兩點，當訊號觸發時移動的門扇會即刻變慢速行進，到門完全開啟再以正常速率關閉

The signal of Side Screen Safety Sensor is controlled by ⑲ and ㉑ .Side Screen Safety Sensors are placed at the rear end of the door to prevent collisions during the opening movement of the moving leaves. When the signal activates , the moving leaves will becomes slowly, till the door opens fully, then close normally

微電腦控制器 MICRO-CONTROLLER

輸入端引線 Input connect

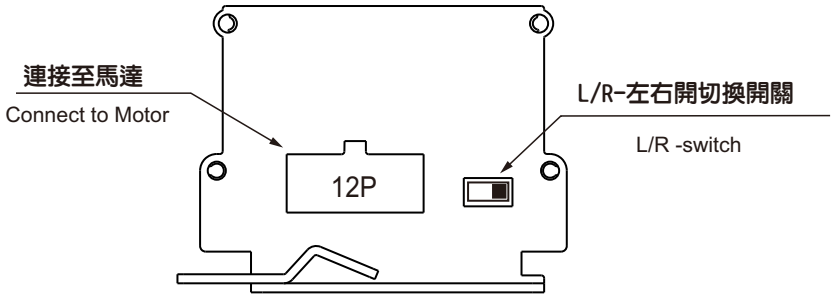

輸出端引線 Output connect

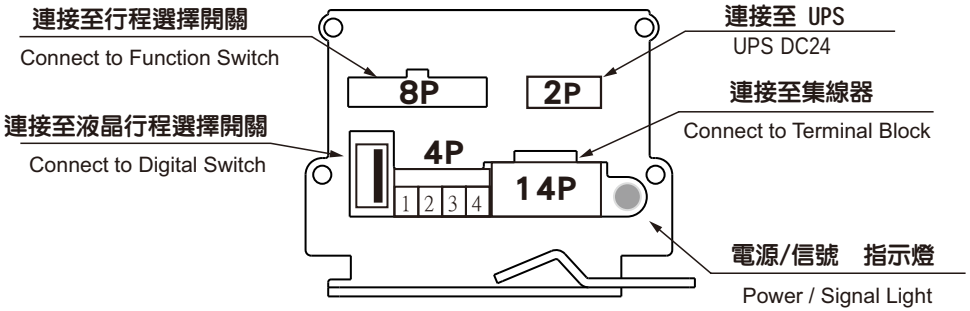

4P 插頭
4P terminal

1	2	3	4

1. DC24V ⊕
2. GND ⊖

感應器電源
Power of SENSOR

3.
4.

感應器信號端子
The signal of SENSOR

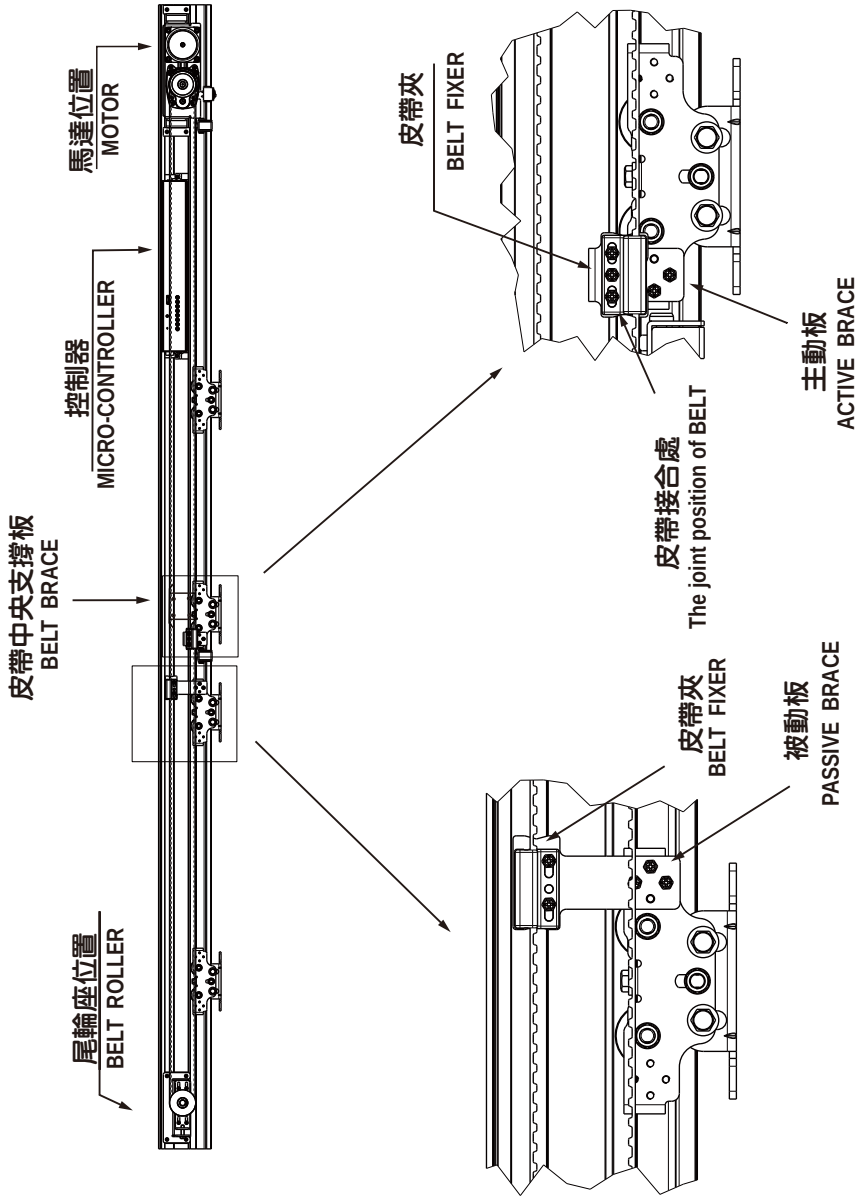

門扇調整 ADJUST THE DOOR-LEAF

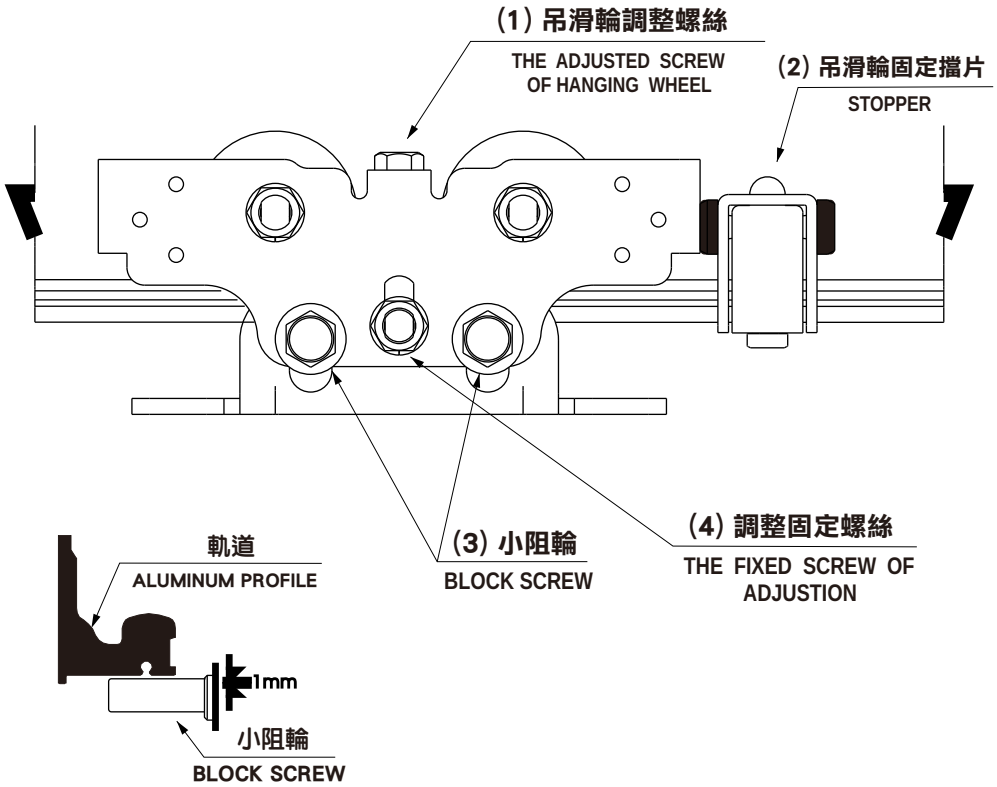

Ⓐ 當門扇的高度與間隙需調整時，首先鬆開小阻輪與調整固定螺絲，旋轉吊滑輪調整螺絲。
When Door-Leaf height and interval need to adjust, loose (3) & (4) at first, then adjust (1).

Ⓑ 調整完畢後，必須擰緊小阻輪與調整固定螺絲。
Need to fasten (3) & (4) after adjust Ⓐ

Ⓒ 門扇開關位置確認後，按置吊滑輪固定擋片，確保開門位置不變。
Install above-mentioned (2) after make sure the DOOR OPEN POSITION.

電氣連接 CONNECTION

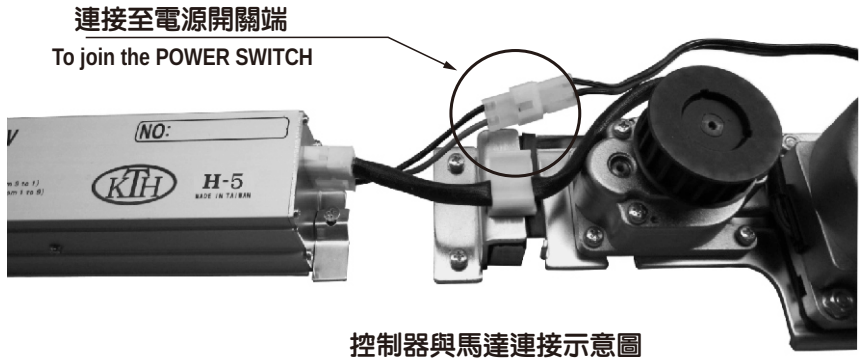

控制器與馬達連接示意圖
The ILLUSTRATED of CONTROLLER and MOTOR.

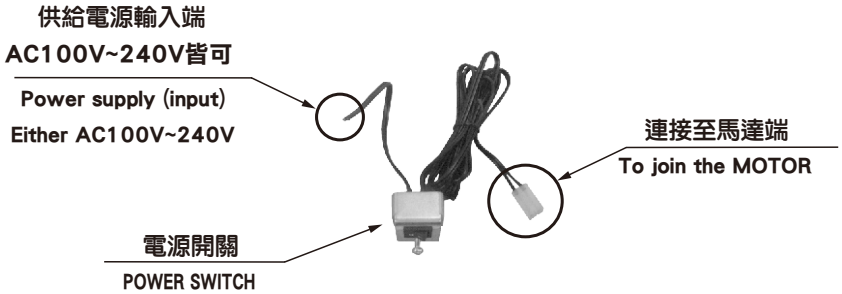

警告 Warning

請確認感應器所標示之電壓是否與供給電源相同，若與供給電源電壓不同時，則感應器需另行加裝變壓裝置否則感應器極易燒毀，連接完畢後，請再確認一次。

Please confirm WHETHER the SENSOR VOLTAGE is the same as the power supply. If different between them, need to add the TRANSFORMER, otherwise the SENSOR would be burned.