# H-8 HEAVY DUTY DOOR

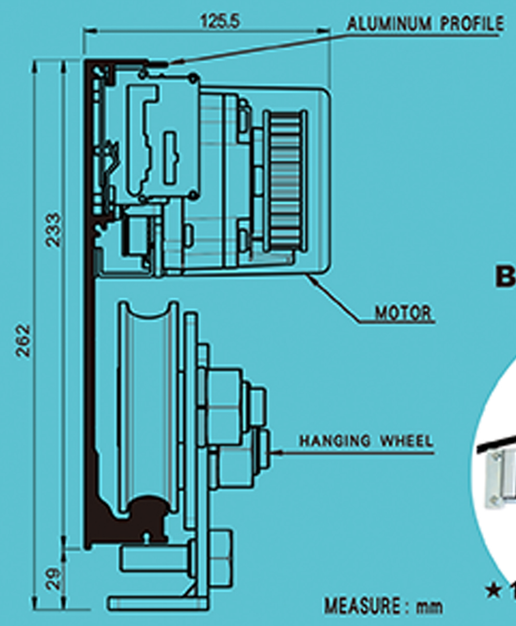


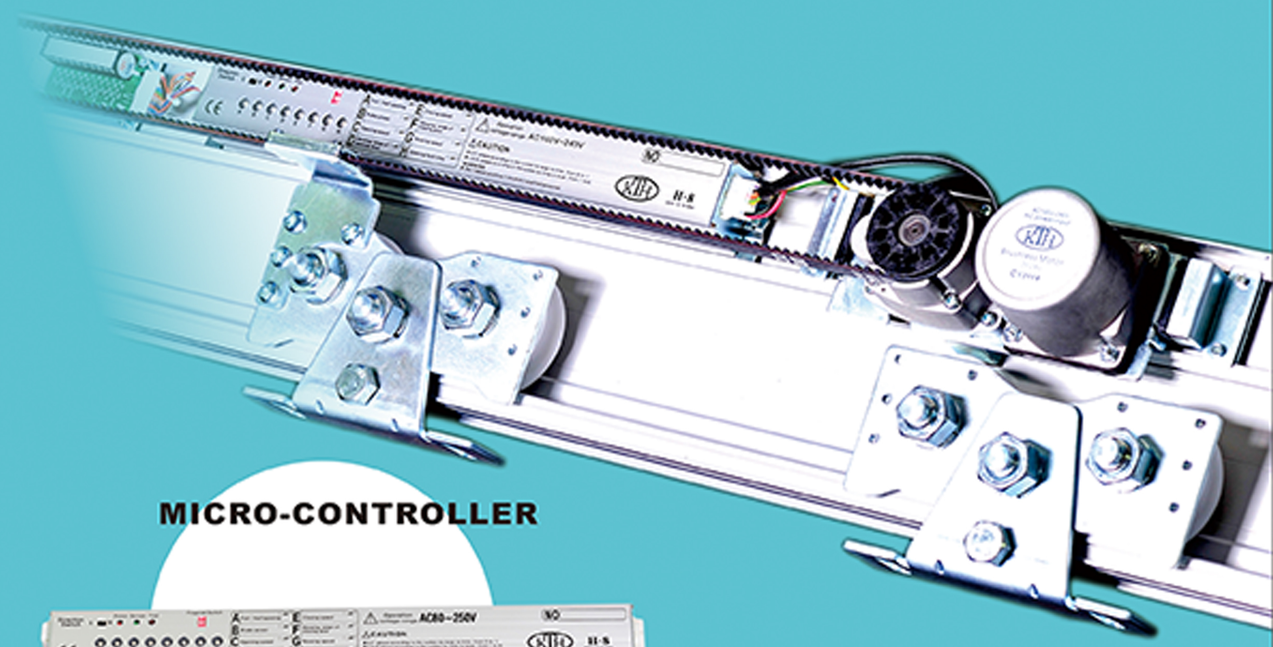

## BRUSHLESS DC MOTOR

★120W BRUSHLESS DC MOTOR

## DURABLE HANGERS

## MICRO-CONTROLLER

★ Intelligence operator provides 8 functions of door's motions.

- Install in factories, hospitals , airports, military bases and other high security areas to be protected.
- Special tracks and wheels, carrying heavier and more stable.
- Using a large radius of the pulley and greatly reduce noise and enhance the useful time.

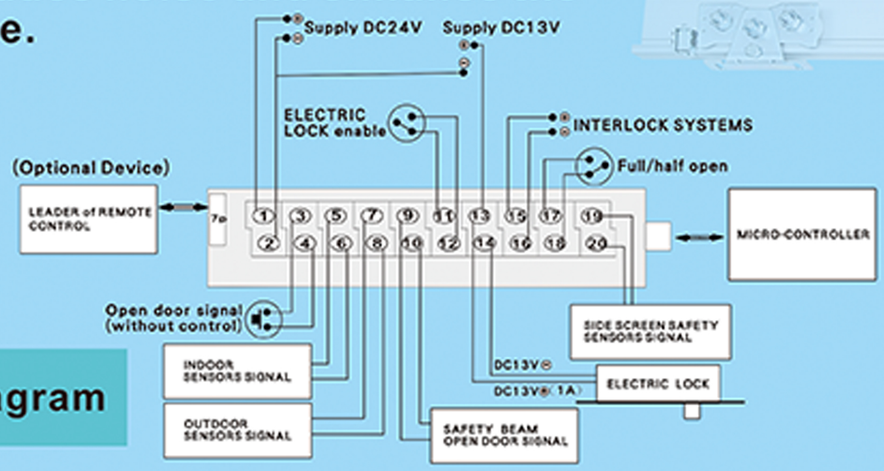


H-8 Wiring diagram

| TYPE | H-8 | |
|---|---|---|
| MODEL | SINGLE-WINGED | BI-PARTING |
| DOOR WEIGHT | 500kgX1(door) | 400kgX2(door) |
| DOOR WIDTH | DW=500mm~6000mm | DW=500mm~6000mm |
| INSTALL WAY | Surface install | Surface install |
| MOTOR | DC24V 120W BRUSHLESS DC MOTOR | |
| CONTROL | STANDARD MICRO-CONTROLLER | |
| POWER CONSUMPTION | 120W | |
| VOLTAGE | AC100V~240V | |
| ENVIRONMENTAL TEMPERATURE | -20℃~+50℃ | |
| VOLUME | 60decibel(max.) | |
| STARTING SPEED | 600mm/(second) | 550mmX2/(second) |
| STARTING TIMES | 0~20 sec. (regulable) | |
| TRANSMISSION IMPORTANT CONDITION | RACK BELT S8M | |
| OPENING DOOR RANGE | FULL/HALF-OPEN (regulable) | |
| PFC POWER EFFICIENCY | 0.95(in AC100V Full load) | |
| TRACTION FORCE | WHEN POWER OFF THE DOOR CAN BE OPENED BY MANUAL | |